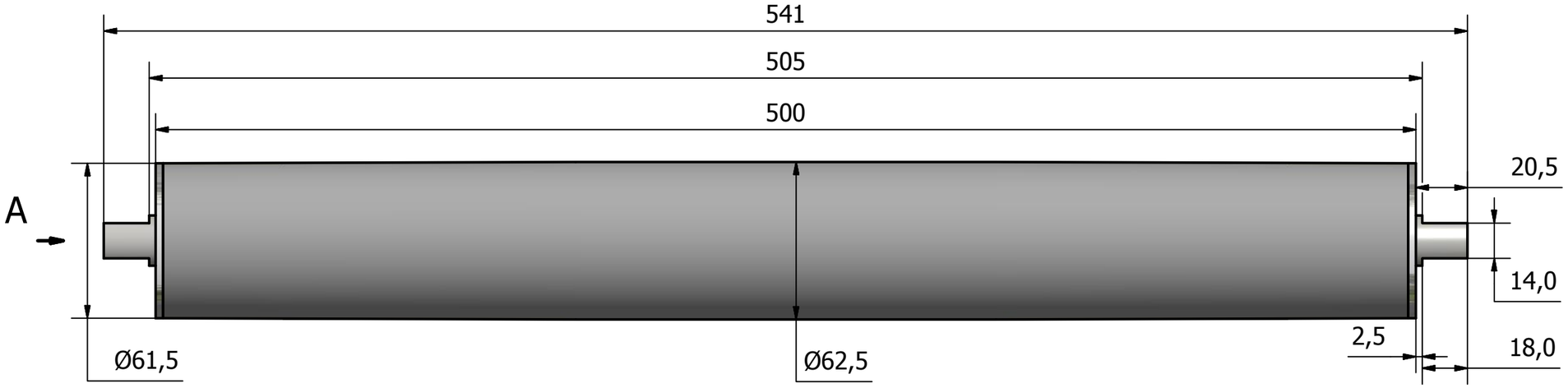

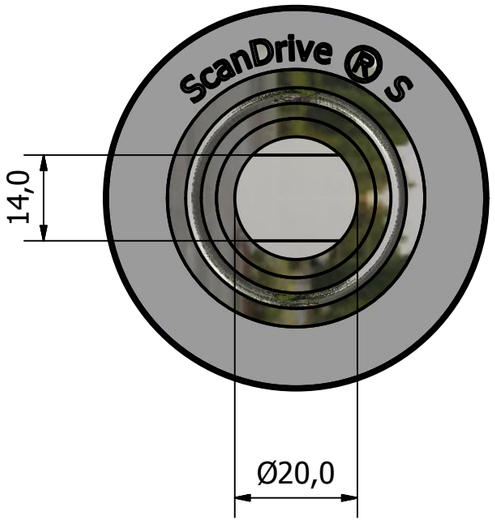

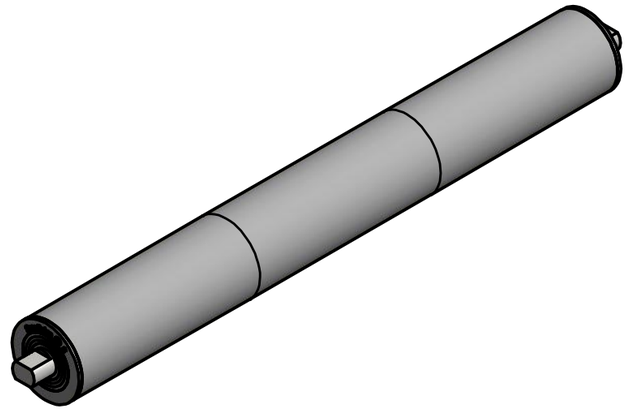

Designed by	Checked by	Approved by	Date	Date	Design state:	
GUH				19-04-2017		
Tolerance : acc. to DS/ISO 2768 - medium						Sheet size: A3
ELLEGAARD				Description:		Scale: 1:2
				Part number: Scandrive S Ø60 RL500		Sheet 1 / 1